ResearchGate

See discussions, stats, and author profiles for this publication at: https://www.researchgate.net/publication/265123030

The Cigré B4 DC grid test system

Article · October 2013

CITATIONS
166

READS
5,320

6 authors, including:

Til Kristian Vrana
SINTEF
46 PUBLICATIONS **849** CITATIONS

SEE PROFILE

Yongtao Yang
DNV GL AS
10 PUBLICATIONS **251** CITATIONS

SEE PROFILE

J.A. Jardini
University of São Paulo
170 PUBLICATIONS **1,505** CITATIONS

SEE PROFILE

Some of the authors of this publication are also working on these related projects:

Project CIGRE B4 View project

Project Brazilian 1000 kV system View project

All content following this page was uploaded by Til Kristian Vrana on 26 August 2015.

The user has requested enhancement of the downloaded file.

The CIGRE B4 DC Grid Test System

B4-58
Til Kristian Vrana
Yongtao Yang
Dragan Jovcic

B4-57
Sebastien Dennetière
Jose Jardini
Hani Saad

1. Introduction

HVDC technology has been used mainly for point-to-point transmission with one sending and one receiving converter station. Although multi-terminal HVDC systems have been applied in some projects, there are only a few such schemes in service.

The integration of new renewable generation and electrification of oil- and gas- platforms from onshore grids, as well as the integration of different electricity markets, have resulted in a demand for new transmission solutions.

The academic community as well as transmission grid operators and manufacturers have gained a strong interest in meshed HVDC grids overlaid on AC networks [1], often referred to as Super Grids. No system of this kind has ever been built, and the entire subject is a future vision and still subject to basic research. A HVDC based electricity grid spanning over entire Europe is envisioned [2], even with possible extensions to northern Africa [3].

SC B4 initiated the WG B4-52 “HVDC Grid Feasibility Study”, that generally concluded that DC grids should be feasible, but the WG identified a number of issues that needed to be studied to a greater level of detail [4]. As a consequence SC B4 initiated additional WGs to cope with the following issues:

WG B4-56: Guidelines for the preparation of “connection agreements” or “Grid Codes” for HVDC Grids

WG B4-57: Guide for the development of models for HVDC converters in a HVDC grid.

WG B4-58: Load flow control and direct voltage control in a meshed HVDC Grid.

WG B4/B5-59: Protection of HVDC Grids.

WG B4-60: Designing HVDC Grids for Optimal Reliability and Availability performance.

JWG B4/C1.65 Recommended voltages for HVDC grids

These WGs use the work and outcome of B4-52 as their starting point. Their focus is on the HVDC grids, and not on the HVAC network to which they are connected. However, AC-DC interaction issues, such as the real power changes injected/extracted from the AC network during dynamic and fault conditions shall be identified.

Voltage Source Converter (VSC) HVDC is often put forward as the ideal technology for Super Grids, as it supports multi-terminal operation with fixed voltage polarity. The majority of the work is based on the use of VSC HVDC, but the impact of the use of Line Commutated Converter (LCC) HVDC will also be discussed. The output from these new WGs may also be relevant for allowing solutions with multiple converter station vendors.

In order to organize discussions among the groups it was decided to develop a DC grid test system with AC and DC parts of a very general nature. All of the SC B4 WGs working on DC grids will use this system (the entire system or parts of it), as much as possible. A possible additional benefit would be that the engineering community could also start to use this system as it has been done with the CIGRE LCC benchmark, so that the results of various DC grid studies can be compared on the same basis.

2. System Description

In this article a DC grid test system is proposed and the basic configuration is presented in Figure 1. The complete system is composed of:

- 2 onshore AC systems
  - System A (A0 and A1)
  - System B (B0, B1, B2 and B3)
- 4 offshore AC systems
  - System C (C1 and C2)
  - System D (D1)
  - System E (E1)
  - System F (F1)
- 2 DC nodes, with no connection to AC
  - B4
  - B5
- 3 interconnected VSC-DC systems
  - DCS1 (A1 and C1)
  - DCS2 (B2, B3, B5, F1 and E1)
  - DCS3 (A1, C2, D1, E1, B1, B4 and B2)

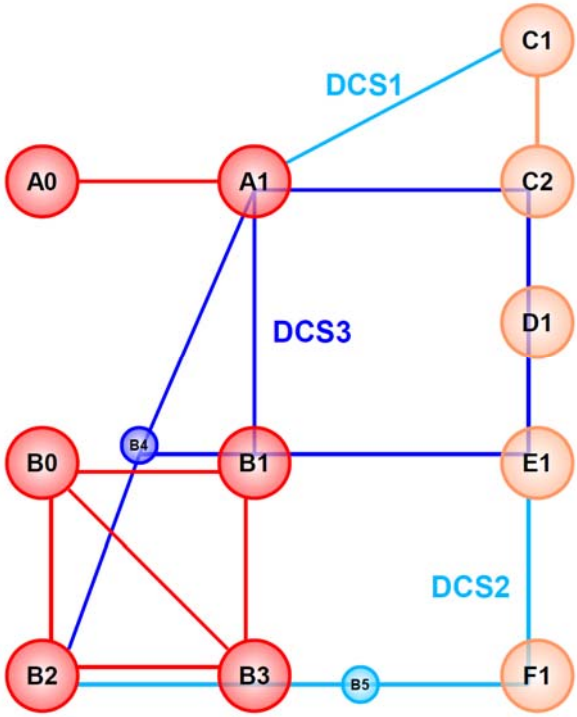

Figure 1 DC Grid Test System Basic Configuration

A more detailed presentation of the test system is shown in Figure 2. All line lengths are given in km. A line drawn in Figure 2 represents a line circuit meaning 3 lines for AC and 2 lines for DC.

Onshore AC busses are called "Ba", offshore AC busses "Bo", sym. monopole DC busses "Bm", bipole DC busses "Bb", monopole AC-DC converter stations "Cm", bipole AC-DC converter stations "Cb" and DC-DC converter stations "Cd".

AC System A consists of two busses, bus Ba-A1 where two AC-DC converters are located and slack bus Ba-A0 representing the rest of system A. System A has an active power surplus and exports electric power. AC system B consists of four busses, Ba-B1, Ba-B2 and Ba-B3 being connected to AC-DC converters and slack bus Ba-B0 representing the rest of system B. AC System B imports active power. AC systems C, D and F are offshore wind power plants and AC system E is an offshore load (oil & gas platform).

DCS1 is a 2-terminal symmetric monopole HVDC link (+/-200kV). It connects the offshore wind power plant at C1 to the onshore node A1.

DCS2 is a 4-terminal symmetric monopole HVDC system (+/-200kV). It connects the offshore wind power plant at F1 and the offshore oil & gas platform at E1 to the onshore node B3 and extends further inland to a load centre B2. This system consists of overhead lines and cables in series, to be able to capture possible interactions of those different line types (wave reflections, etc.)

DCS3 is a 5-terminal bipole HVDC meshed grid (+/-400kV). DCS3 contains a DC-DC converter at B1 for power flow control.

All three direct current systems are based on VSC technology. The two voltages (200kV and 400kV) are nominal voltages and they represent 1pu voltage. The operational frame for the direct current systems has the upper limit at 1.05pu and the lower limit at 0.95pu.

There is no direct connection between DCS1 and DCS2. DCS1 and DCS3 are interconnected through AC node at A1 (and somehow also through system C). DCS2 and DCS3 are interconnected through a DC-DC converter station at E1 and through an AC node at B2.

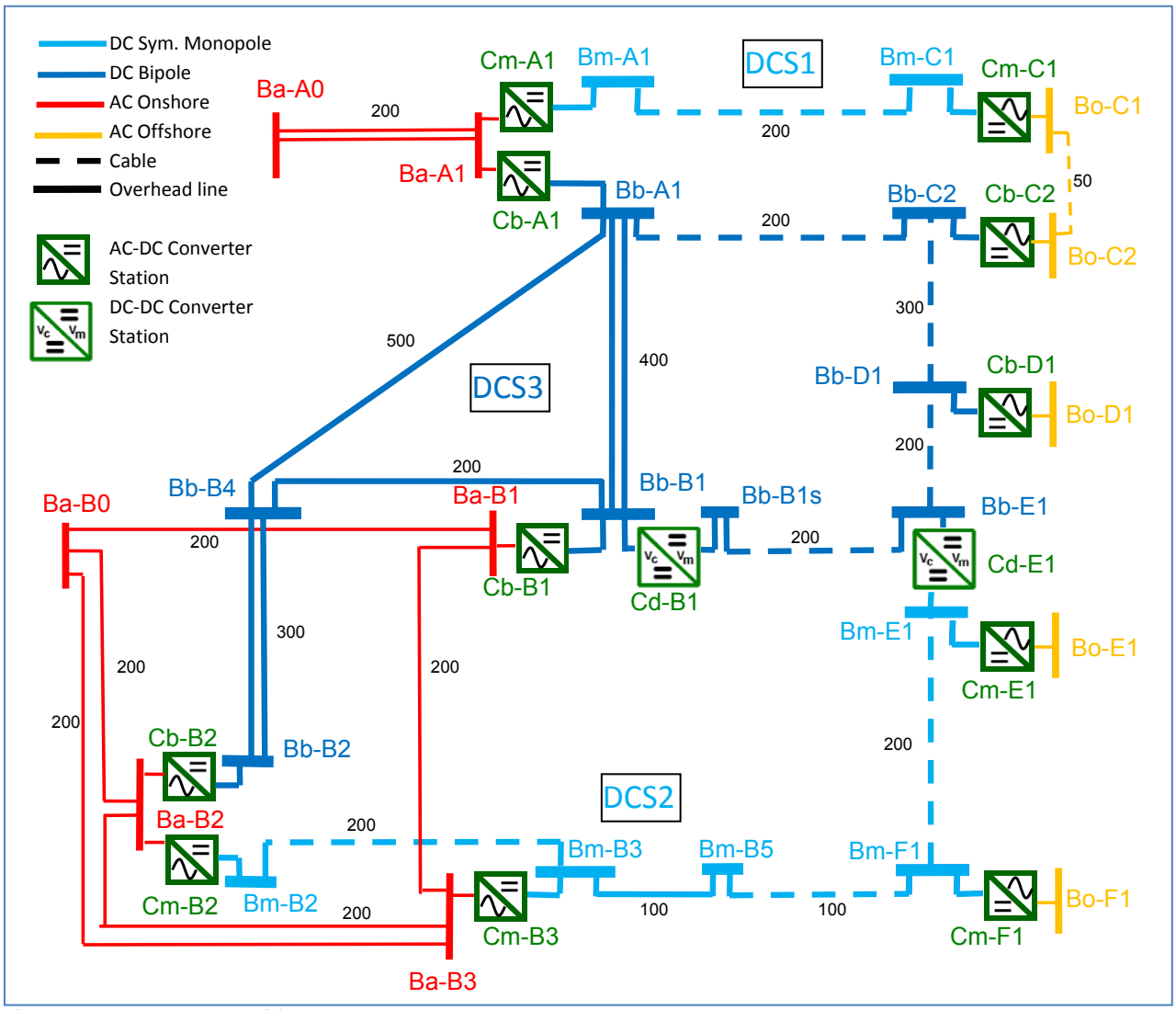

Figure 2 CIGRE B4 DC Grid Test System

Any of these 3 DCSs can be used separately for tasks where the full test system is too complex. The DC-DC converter station within DCS3 at B1 can be bypassed if that is desired (it changes the power flow). The DC-DC converter station that connects DCS2 and DCS3 at E1 cannot be bypassed but it can be removed (disconnecting DCS2 and DCS3 at E1).

A monopole AC-DC converter station consists of one AC-DC converter pole (shown in section 4 of this article). A bipole AC-DC converter station consists of two AC-DC converter poles. This is shown in Figure 3. The bipole DC voltage is twice as high as the symmetric monopole DC voltage, giving all converter poles in the system the same DC voltage (to make modelling easier).

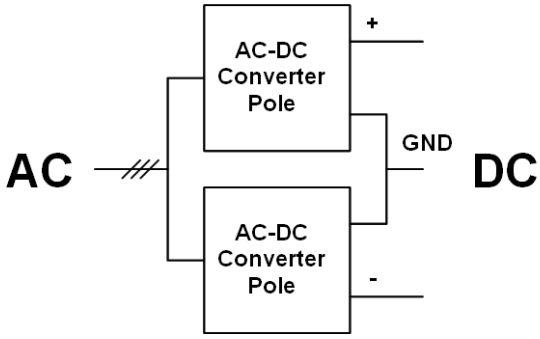

Figure 3 Bipole converter station

Average value models[1] for electromechanical transient studies are given in this article. More detailed electromagnetic transient models will be given in the technical brochure B4-57. The AC systems operate at 50Hz. All AC voltages in this article are given as Line-to-Line RMS voltage.

The active power reference used in this article is that loads are positive active power. For power converters, transfer from the side with measured voltage (V_m-side) to the side with controlled voltage (V_c-side) is positive active power. For an AC-DC converter this means from DC to AC.

The focus of the system is to study the DC systems and the converter control. Therefore it was decided to not model the AC generators and loads in detail in the first instance and they are simply represented by constant active power sources and sinks (given in Table 2).

Only symmetric operation is regarded, so all ground currents are zero. All data given refers to positive sequence. For simulation grounded neutral can be utilised although a real future system probably will have a dedicated metallic return.

3. Basic system data for power flow

3.1. System Data

Table 1 gives the voltages of the different subsystems and Table 2 AC bus data.

System	Voltage [kV]
AC Onshore	380
AC Offshore	145
DC Sym. Monopole	+/-200
DC Bipole	+/-400

Table 1: System data

[1] In the AC systems, average value model is also referred to as “phasor domain model”.

Bus	Bus Type	Generation [MW]	Load [MW]
Ba-A0	Slack Bus	-	
Ba-A1	PQ	-2000	1000
Ba-B0	Slack Bus	-	
Ba-B1	PQ	-1000	2200
Ba-B2	PQ	-1000	2300
Ba-B3	PQ	-1000	1900
Ba-C1	PQ	-500	0
Ba-C2	PQ	-500	0
Ba-D1	PQ	-1000	0
Ba-E1	PQ	0	100
Ba-F1	PQ	-500	0

Table 2: AC bus data

3.2. AC-DC Converter Station Data

Table 3, Table 4 and Table 5 give the data for all the AC-DC converter stations.

AC-DC Converter Station	Power Rating [MVA]	Operation Mode Setpoints	
Cm-A1	800	Q = 0	V_{DC} = 1pu
Cm-C1	800	AC Slack	

Table 3: DCS1 data

AC-DC Converter Station	Power Rating [MVA]	Operation Mode Setpoints	
Cm-B2	800	Q = 0	V_{DC} = 0.99pu
Cm-B3	1200	V_{AC} = 1pu	P = 800MW
Cm-E1	200	AC Slack	
Cm-F1	800	AC Slack	

Table 4: DCS2 data

AC-DC Converter Station	Power Rating [MVA]	Operation Mode Setpoints	
Cb-A1	2*1200	V_{AC} = 1pu	V_{DC} = 1.01pu
Cb-B1	2*1200	V_{AC} = 1pu	P = 1500MW
Cb-B2	2*1200	V_{AC} = 1pu	P = 1700MW
Cb-C2	2*400	V_{AC} = 1pu	P = - 600MW
Cb-D1	2*800	AC Slack	

Table 5: DCS3 data

3.3. DC-DC Converter Station Data

Table 6 gives the data for the DC-DC converter stations.

DC-DC Converter Station	Power Rating [MW]	Operation Mode Setpoints
Cd-B1	2000	P = 600MW
Cd-E1	1000	P = 300MW

Table 6: DC-DC converter data

3.4. Data for calculation of the losses

The line data for calculating the power flow can be found in Section 0.

4. Power Flow

An approximate power flow is presented in Figure 4.

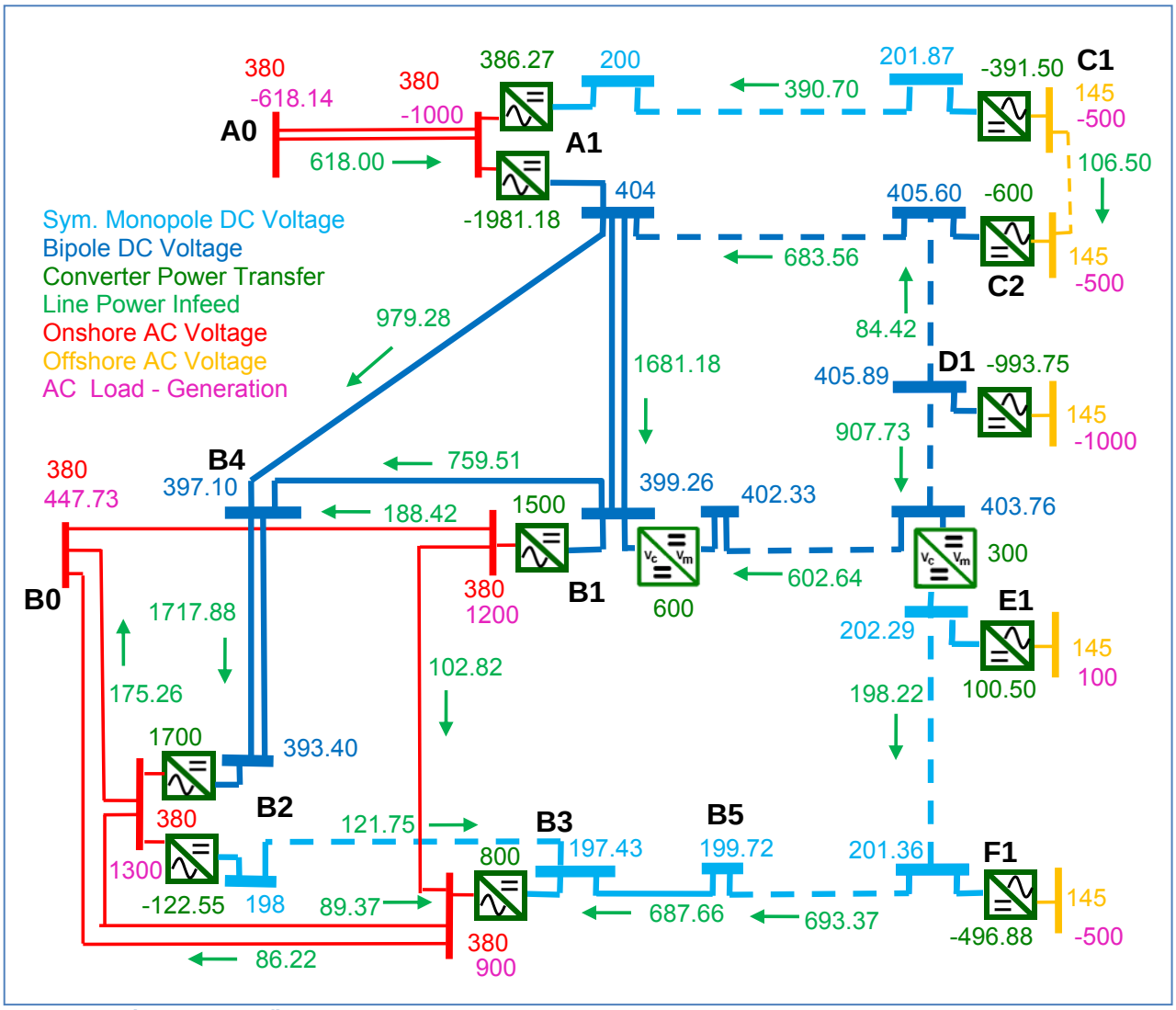

Figure 4 Approximate power flow

5. Average Value Models for Electromechanical Transient Studies

5.1. AC-DC converter pole

The AC-DC converter pole model consists of one ideal AC-DC converter, one ideal transformer and 4 passive elements. The AC-DC converter is modelled as a current source on the DC side behind a capacitor and a voltage source on the AC side behind an inductor. The transformer is modelled as an ideal transformer. Transformer and converter have the same MVA rating. The model of an AC-DC converter pole is presented in Figure 5.

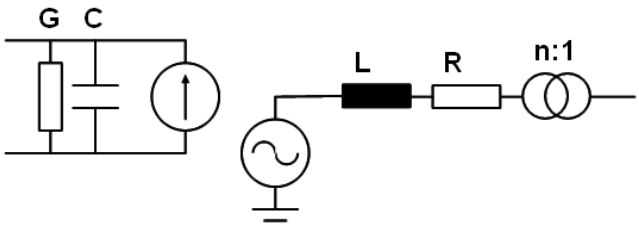

Figure 5 Average value model of the AC-DC converter pole

All converters operate on 400kV DC voltage and 220kV AC voltage. The AC voltage at the Point of Common Coupling (PCC) can be either 380kV (onshore) or 145kV (offshore), but this only influences the ratio of the ideal transformer while it does not influence the rest of the converter pole model.

The model has been selected for easy implementation in average value model simulation software, even though it is not giving an exact representation of modern MMC (Modular Multilevel Converter) technology. A basic description of MMC topology is proposed in the appendix. Detailed models suitable for EMT simulation tools will be described in the technical brochure of WG B4-57. Some descriptions of EMT models are available in [5], [6] and [7].

All given values in pu are referring to a local converter pu system and are based on a real project presented in [5]. DC values are given with reference to DC pu. As the system frequency for the DC system is zero, L and C are not behaving like reactances but like integrators. Their pu value is therefore not expressed in "%" with respect to the base impedance but as time constants in "ms". The time constant of a capacitor expresses the time it takes to charge the capacitor to reference voltage with the reference current (the definition for an inductor is equivalent).The values for converters are given in two different pu systems, one for each side.

Inductance values proposed in Table 7: is composed of converter transformer inductance (18%) plus half the converter arm inductance (15% /2). The reference voltages are:
$\mathrm{V_{AC,ref}} = \mathrm{V_{AC,con}} = 220\mathrm{kV}$ and $\mathrm{V_{DC,ref}} = \mathrm{V_{DC}} = 400\mathrm{kV}$.

The following formulae are used to calculate the physical values:

$$L = L_{pu} \cdot \frac{Z_{AC,ref}}{\omega_{ref}} \qquad R = R_{pu} \cdot Z_{AC,ref} \qquad G = G_{pu} \cdot \frac{1}{Z_{DC,ref}} \qquad C = C_{pu} \cdot \frac{1}{Z_{DC,ref}}$$

	pu	E1	C2	A1, B2, C1, D1, F1	A1, B1, B2, B3
S	1.0	200MVA	400MVA	800MVA	1200MVA
L	25.5%	196mH	98mH	49mH	33mH
R	1.00%	2.420Ω	1.210Ω	0.605Ω	0.403Ω
G	0.10%	1.25µS	2.50µS	5.00µS	7.50µS
C [2]	60ms	75µF	150µF	300µF	450µF

Table 7: General AC-DC converter pole data

[2] The equivalent capacitance value is based on a 1000MVA project with the following approximate data : Vdc = +/-320 kV, Submodule capacitance C_{SM}=10mF, Number of submodules per half arm : 400.
C = 6*C_{SM}/N = 150 µF or 60 ms in pu

5.2. DC-DC converter station

The DC-DC converter station consists of an ideal DC-DC converter and 4 passive elements. The DC-DC converter is modelled as a current source behind a capacitor on the side where voltage is measured (V_m-side, generally the side with higher voltage) and as a voltage source behind an inductor on the side where voltage is controlled (V_c-side, generally the side with lower voltage). The model of a DC-DC converter station is given in Figure 6.

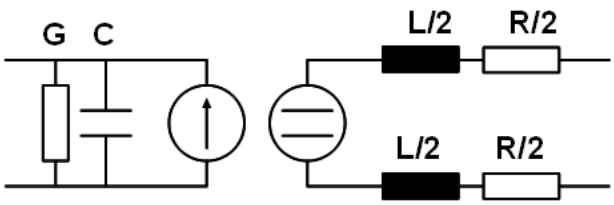

Figure 6 Model of the DC-DC converter station

The offshore DC-DC converter at E1 operates at 800kV on the V_m-side and at 400kV on the V_c-side. The onshore DC-DC converter at B1 operates at 800kV on both sides. Table 8 shows the DC-DC converter data.

	pu	E1	B1
S	1.0	1000MW	2000MW
L	5ms	800mH	1600mH
R	1,200%	1,92Ω	3,84Ω
G	0,025%	0,390625µS	0,78125µS
C	5ms	7,8125µF	15,625µF

Table 8: General DC-DC converter station data

5.3. Lines and cables

The test systems contain AC and DC cables and overhead lines. The R-L-G-C parameters needed for average value simulation are given in Table 9. These parameters are calculated with the CABLE DATA and LINE DATA routines based on the detailed description, which will be published in the technical brochure B4-57. AC lines are represented by 50Hz data and DC lines by DC data.

Line Data	R [Ω/km]	L [mH/km]	C [µF/km]	G [µS/km]	Max. current [A]
DC OHL +/- 400kV	0.0114	0.9356	0.0123	-	3500
DC OHL +/- 200kV	0.0133	0.8273	0.0139	-	3000
DC cable +/-400kV	0.0095	2.1120	0.1906	0.048	2265
DC cable +/-200kV	0.0095	2.1110	0.2104	0.062	1962
AC cable 145kV	0.0843	0.2526	0.1837	0.041	715
AC OHL 380kV	0.0200	0.8532	0.0135	-	3555

Table 9: Line data for average value model simulation

5.4. AC Slack Busses

AC slack busses are modelled as voltage source with R-L impedance. The parameters are given in Table 10.

S	30GVA
X/R	10
T	15s
λ	15MW/mHz
V	380kV

Table 10 Slack bus data

6. Control

6.1. AC-DC Converter

A high level view of the control system hierarchy is presented in Figure 7.

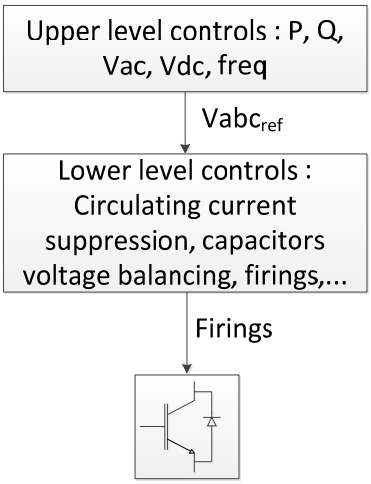

Figure 7 High level description of control system for MMC technology

Upper level controls depend on the type of AC system connected to converter; Basically 2 types of upper level controls are available:

- Non-islanded mode controls when the converter is connected to a strong AC system with active synchronous generation,
- Islanded mode controls when the converter is connected to passive loads or AC system with a limited short circuit power ratio and inertia (e.g.: weak AC grid, wind farm).

With islanded mode controls the converter has an active role in the AC system frequency. Upper level controls generate AC voltages reference values with a fixed magnitude and phase angle.

A simplified view of the control system for non-islanded mode is presented in Figure 8.

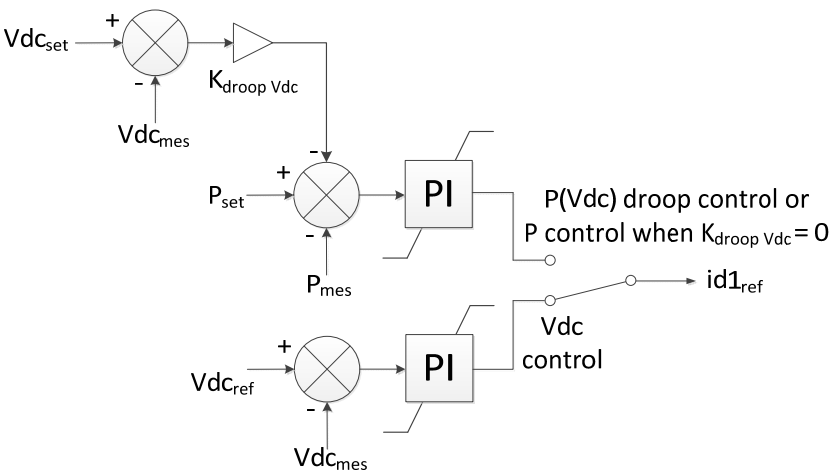

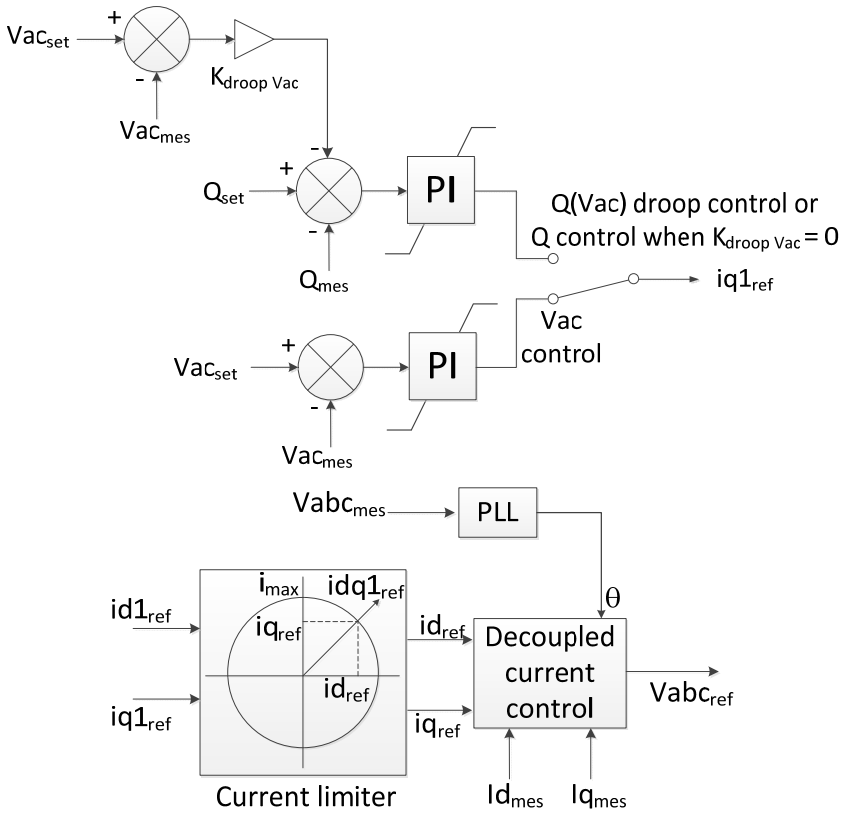

Figure 8 General description of converters upper level control system for non-islanded mode

The VSC-type uses a vector control strategy that calculates a voltage time area across the transformer/converter equivalent reactor which is required to change the current from present value to the reference value. The dq0-frame current orders to the controller are calculated from preset P_set and Q_set powers, and preset Q_set and V_set voltages. The inner controller (Decoupled current controller [8]) permits controlling the converter ac voltage that will be used to generate the modulated switching pattern.

The control parameters of all AC-DC converters are given in Table 11, Table 12 and Table 13.

AC-DC Converter Station	Control Mode	
Cm-A1	Q	V_{DC}
Cm-C1	AC Slack	

Table 11 DCS1 control data

AC-DC Converter Station	Control Mode		V_{AC} droop [pu ; MVAr/kV]	V_{DC} droop [pu ; MW/kV]
Cm-B2	$Q(V_{AC})$	$P(V_{DC})$	10 ; 21.053	10 ; 40
Cm-B3	$Q(V_{AC})$	$P(V_{DC})$	10 ; 31.579	10 ; 60
Cm-E1	AC Slack		-	-
Cm-F1	AC Slack		-	-

Table 12 DCS2 control data

AC-DC Converter Station	Control Mode		V_{AC} droop [pu ; MVAr/kV]	V_{DC} droop [pu ; MW/kV]
Cb-A1	$Q(V_{AC})$	$P(V_{DC})$	10 ; 63.158	10 ; 60
Cb-B1	$Q(V_{AC})$	$P(V_{DC})$	10 ; 63.158	10 ; 60
Cb-B2	$Q(V_{AC})$	$P(V_{DC})$	10 ; 63.158	10 ; 60
Cb-C2	V_{AC}	P	-	-
Cb-D1	AC Slack		-	-

Table 13 DCS3 control data

The droop controllers must be implemented with a power reference and voltage reference being equal to the value achieved in the power flow calculation using the references from the operation mode given in Section 3 of this article.

6.2. DC-DC Converter

The DC-DC converters are controlled using a constant voltage ratio (defined $D = V_c / V_m$). This voltage ratio is determined from the initialisation procedure to achieve the correct power transfer set-point, as given in Table 6. Calculated values for the voltage ratio, based on the power flow in Figure 4, are given in Table 14.

DC-DC Converter Station	Control Mode	D [%]
Cd-B1	D	99,595%
Cd-E1	D	50,280%

Table 14 DCDC converter control data

As the converter is ideal, and all imperfections (e.g. losses) are represented by the external RLGC components, the current ratio is $1/D$.

7. Conclusion

The CIGRE B4 DC Grid Test System has been designed by working groups B4-58 and B4-57. Its purpose is to have a common reference for studies concerning DC grids, within but also outside CIGRE B4. The initial results of power flow are presented which confirm steady-state operation and small signal stability. DC grids is a very recent research subject, and due to a lack of operational experience and data, it would be too early to define a benchmark system. The test system can however still serve as a common reference but it can also be adopted for individual studies, if that is needed.

Appendix on MMC

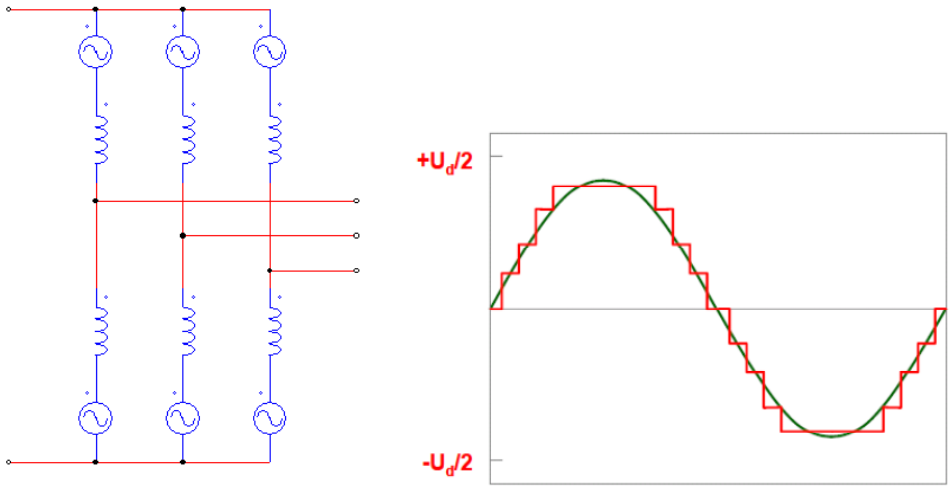

Figure 9 Simplified view of MMC topology and control principle

A MMC consists of 6 arms with arm reactors. Each arm behaves as a controllable voltage source with a high number of possible discrete voltage steps. Each of these controllable voltage sources is composed of a large number (between several tenths to several hundred) of submodules connected in series. The large number of step allows generating a practically pure sinusoidal waveform from the DC voltage. This is shown in Figure 9.

Acknowledgement

The authors would like to thank the members of CIGRE study groups B4-57 and B4-58 for their comments and contributions, especially Andrew Isaacs, Carl Barker and Jef Beerten. Special thanks also to Philippe Adam for initiating the activities on the CIGRE B4 DC Grid Test System.

References

[1] D. Van Hertem, M. Ghandhari, 'Multi-terminal VSC HVDC for the European supergrid: Obstacles', Renewable & Sustainable Energy Reviews, vol. 14, no. 9, 2010.
[2] 'Position paper on the EC Communication for a European Infrastructure Package', Friends of the Supergrid, December 2010.
[3] 'Energy from deserts', Report, Desertec Industrial Initiative, November 2011.
[4] CIGRE WG B4.52 "Feasibility of HVDC grids" *CIGRE technical brochure 533, Paris, April 2013.*
[5] J. Peralta, H. Saad, S. Dennetière, J. Mahseredjian, and S. Nguefeu, "Detailed and Averaged Models for a 401-level MMC-HVDC system," IEEE Trans. on Power Delivery, vol. 27, no. 3, July 2012, pp. 1501-1508.
[6] Gnanarathna U., Gole A. & Jayasinghe R., "Efficient Modelling of Modular Multilevel HVDC Converters (MMC) on Electromagnetic Transient Simulation Programs", IEEE Transactions on Power Delivery, Vol. 26, Pages 316 -324, January, 2011.
[7] P. Le-Huy, P. Giroux, J.-C. Soumagne, "Real-Time Simulation of Modular Multilevel Converters for Network Integration Studies", International Conference on Power Systems Transients, Delft, The Netherlands, June 2011.
[8] A. Lindberg, "PWM and Control of Two and Three level High Power Voltage Source Converters," Licentiate Thesis, Royal Institute of Technology, Stockholm, Sweden, 1995.

View publication stats